John Deere
JD24
Skid-Steer Loader

JOHN DEERE

TECHNICAL MANUAL

John Deere JD24
Skid-Steer Loader

TM1042 (01DEC74) English

John Deere
Lawn & Grounds Care Division
TM1042 (01DEC74)

LITHO IN U.S.A.
ENGLISH

JD24 SKID-STEER LOADER
TECHNICAL MANUAL
TM-1042 (Dec-74)

CONTENTS

SI (International System) UNITS OF MEASURE

Metric equivalents have been included, where applicable, throughout this technical manual.

"All information, illustrations and specifications contained in this technical manual are based on the latest information available at the time of publication. The right is reserved to make changes at any time without notice."

Litho in U.S.A.

FOR YOUR CONVENIENCE

Vertical lines appear in the margins of many of the pages. These lines identify new material and revised information that affects specifications, procedures, and other important instructions.

INTRODUCTION

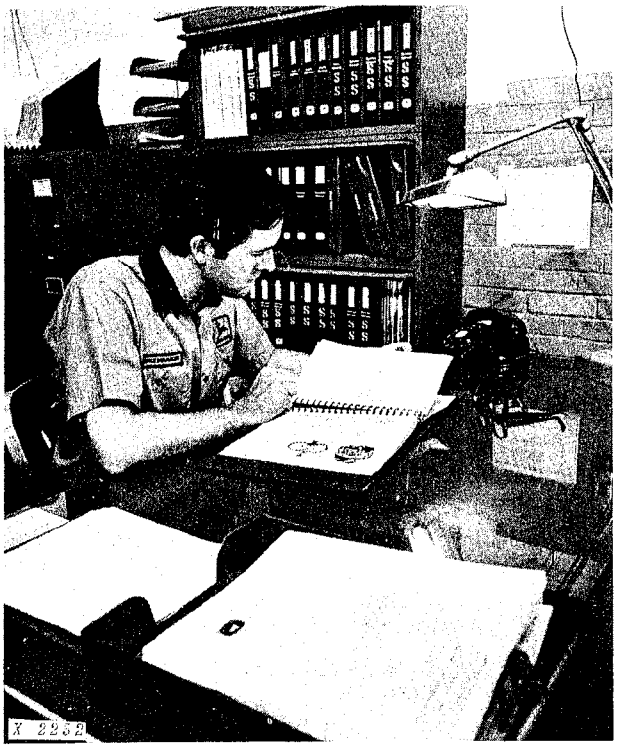

Use FOS Manuals for Reference

Use Technical Manuals for Actual Service

This technical manual is part of a twin concept of service:

- **FOS Manuals—for reference**
- **Technical Manuals—for actual service**

The two kinds of manuals work as a team to give you both the general background and technical details of shop service.

Fundamentals of Service (FOS) Manuals cover *basic* theory of operation, *fundamentals* of trouble shooting, *general* maintenance, and *basic* types of failures and their causes. FOS Manuals are for training new men and for reference by experienced men.

Technical Manuals are concise service guides for a *specific* machine. Technical Manuals are on-the-job guides containing only the vital information needed by a journeyman mechanic.

When a serviceman should refer to a FOS Manual for more information, a FOS symbol like the one at the left is used in the TM to identify the reference.

Some features of this technical manual:

- *Table of contents at front of manual*
- *Exploded views showing parts relationship*
- *Photos showing service techniques*
- *Specifications grouped for easy reference*

This technical manual was planned and written for you—a journeyman mechanic. Keep it in a permanent binder in the shop where it is handy. Refer to it whenever in doubt about correct service procedures or specifications.

Using the technical manual as a guide will reduce error and costly delay. It will also assure you the best in finished service work.

This safety alert symbol identifies important safety messages in this manual. When you see this symbol, be alert to the possibility of personal injury and carefully read the message that follows.

Litho in U.S.A.

SAFETY AND YOU

INTRODUCTION

This safety alert symbol identifies important safety messages in this manual and on the skid-steer loader. When you see this symbol, be alert to the possibility of bodily injury and carefully read the message that follows.

T27999N

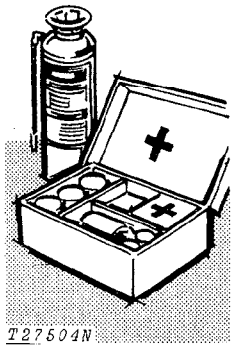

T27504N

Be prepared if an accident or fire should occur. Know where the first aid kit and the fire extinguishers are located—know how to use them.

BOOM LOCKS

CAUTION

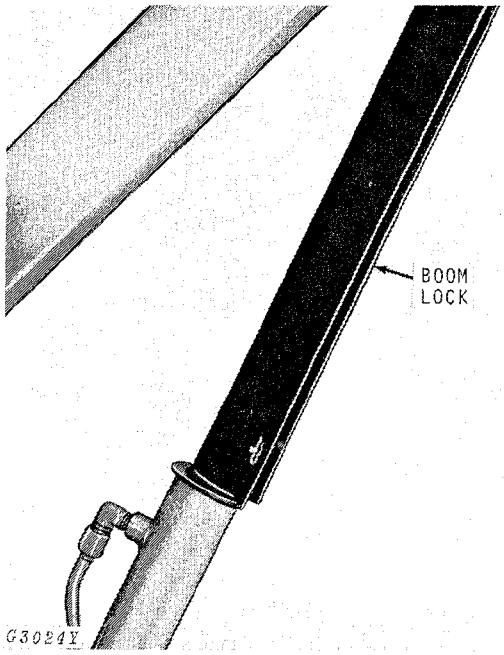

G3024Y

Install the boom locks on the lift cylinders as follows whenever work or repair is being done on the loader with the boom raised:

1. Start the engine and raise the boom to its greatest height. Shut off the engine.

2. Lay the boom locks on the cylinder rods and install the drilled pins and spring pins.

3. Install boom locks on other cylinder rods in the same manner.

4. Lower the boom until it contacts the boom locks.

IMPORTANT: After servicing the loader, raise the boom and remove the boom locks.

AVOID FIRE HAZARDS

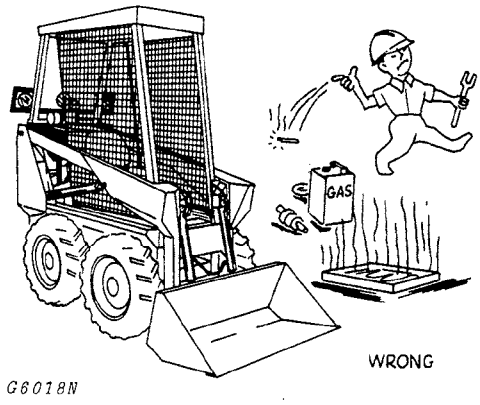

Don't smoke while refueling or handling highly flammable material.

Engine should be shut off when refueling.

Use care in refueling if the engine is hot.

Don't use open pans of gasoline or diesel fuel for cleaning parts. Good commercial, nonflammable solvents are preferred.

Provide adequate ventilation when charging batteries.

Don't check battery charge by placing metal objects across the posts.

Don't allow sparks or open flame near batteries.

Don't smoke near battery.

Never check fuel, battery electrolyte, or coolant levels with an open flame.

Never use an open flame to look for leaks anywhere on the equipment.

Never use an open flame as a light anywhere on or around the equipment.

When preparing engine for storage, remember that internal corrosion inhibitor is volatile and therefore dangerous. Seal and tape openings after adding the inhibitor. Keep container tightly closed when not in use.

CLEANING THE LOADER

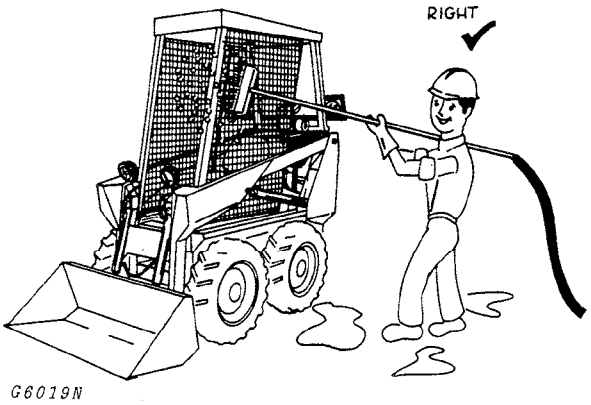

Always stop the engine before cleaning the loader.

Keep the operator's platform clean. Do not use it as a storage area.

Keep the engine closure screens free of foreign matter. Avoid a possible fire hazard.

Keep all equipment free of dirt and oil. In freezing weather, beware of snow and ice on operator's platform.

SERVICE AREA

Keep the service area clean and dry. Wet or oily floors are slippery. Wet spots can be dangerous when working with electrical equipment.

Make sure the service area is adequately vented.

Periodically check the shop exhaust system for leakage. Engine exhaust gas is dangerous.

Be sure all electrical outlets and tools are properly grounded.

Use adequate light for the job at hand.

Litho in U.S.A.

FLUIDS UNDER PRESSURE

Escaping fluid under pressure can have sufficient force to penetrate the skin, causing serious bodily injury. Before disconnecting lines, be sure to relieve all pressure. Before applying pressure to the system, be sure all connections are tight and that lines, pipes and hoses are not damaged. Fluid escaping from a very small hole can be almost invisible. Use a piece of cardboard or wood, rather than hands, to search for suspected leaks.

If injured by escaping fluid, see a doctor at once. Serious infection or reaction can develop if proper medical treatment is not administered immediately.

Don't forget the hydraulic system may be pressurized! To relieve pressure, follow the technical manual.

When checking hydraulic pressure, be sure to use the correct test gauge for the pressure in the particular system.

PERSONAL SAFETY

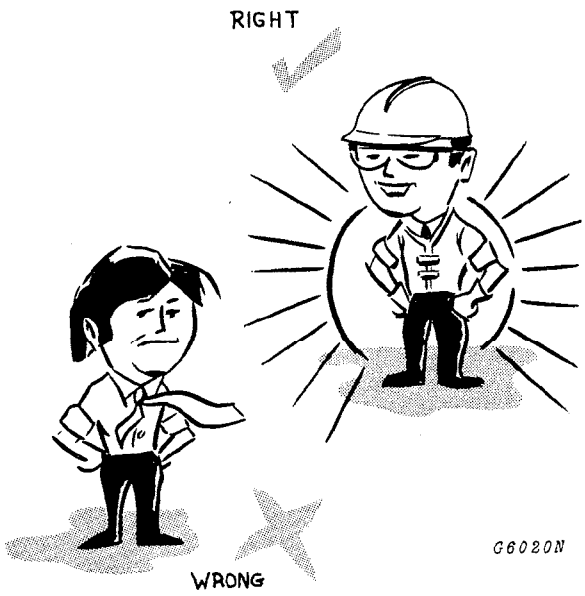

Always avoid loose clothing—flopping cuffs, dangling neckties and scarves—that can catch in moving parts and put you out of work.

Always wear your safety glasses while on the job.

Keep transmission and brake control units properly adjusted at all times. Before making adjustments, stop engine.

Before removing any housing covers, stop engine. Take all objects from your pockets which could fall into the opened housings. Don't let adjusting wrenches fall into opened housings.

Don't attempt to check chain belt tension while the engine is running.

Don't adjust the fuel system while the machine is in motion.

Before repairing the electrical system, for performing a major overhaul, make sure the batteries are disconnected.

Avoid working on equipment with the engine running. If it is necessary to make checks with the engine running, ALWAYS USE TWO MEN—one, the operator, at the controls, the other checking where the operator can see him. Also, put the transmission in neutral, set the brake, and apply any safety locks provided. KEEP HANDS AWAY FROM MOVING PARTS.

Use extreme caution in removing drain plugs, grease fittings, or hydraulic pressure caps.

Litho in U.S.A.

Litho in U.S.A.

Section 10
GENERAL

CONTENTS OF THIS SECTION

Group 5
SPECIFICATIONS

LOADER DESIGN

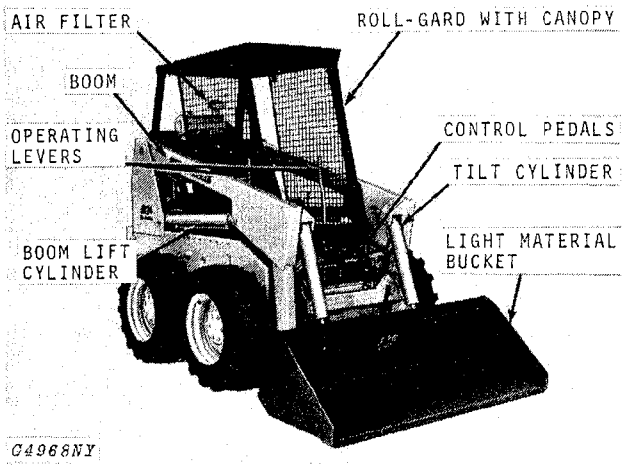

Fig. 1-JD24 Skid-Steer Loader

The JD24 Skid-Steer Loader is a 1700-pound capacity, self-propelled, four-wheel drive loader used for various material handling operations. It also has the ability to maneuver in small, tight areas.

All references in this manual to front, rear, left-hand and right-hand are in relation to the position of the operator seated in the operator's station.

SERIAL NUMBERS

The serial number plate is located on the right-hand side; inside the frame under the boom pivot.

Litho in U.S.A.

LOADER SPECIFICATIONS

ENGINE (Gasoline)
- Flywheel Horsepower at 2400 RPM ..... 37 hp (27.59 Kw)
- Number of Cylinders 4
- Bore and Stroke ..... 3.50 x 4 in. (8.89 cm x 10.16 cm)
- Piston Displacement ..... 154 cu. in. (252.41 cm³)
- Compression Ratio ..... 5.05 to 1
- Intake Valve Clearance ..... .008 in. (0.2032 mm)
- Exhaust Valve Clearance ..... .016 in. (0.4064 mm)
- Slow idle ..... 900 RPM
- Fast idle ..... 2550 RPM
- Starting ..... Electric
- Fuel ..... Gasoline (Regular Grade)
- Governor ..... Cam Gear Driven

ENGINE: (Diesel)
- John Deere (3152D 3-cylinder, 4 stroke, diesel)
- Horsepower ..... 37 (Flywheel) (27.59 Kw) (at 2500 engine rpm)
- Displacement ..... 152.0 cu. in. (249.08 cm³)
- Compression ratio 16.3:1
- Bore and stroke, inches ..... 3.86 x 4.33
- Torque (ft-lbs) max. at 1300 rpm (9.80 x 10.99 cm)
  - (observed) (nominal) 92.0
- N.A.CC or A.M.A. horsepower..... (120.73 Nm)
  - rating for tax purposes ..... 17.88 (13.33 Kw)
- Intake valve clearance ..... 0.014" (0.357 mm)
- Exhaust valve clearance ..... 0.018" (0.457 mm)
- Slow idle (rpm) 1200
- Fast idle (rpm) 2650
- Working speed range (rpm) 1500-2500

COOLING SYSTEM: (Diesel)
- Capacity ..... 14 U.S. quarts (13.25 l)
- Thermostat ..... 180°F (82°C)
- Operating pressure ..... 14 psi (96.52 kPa)

ELECTRICAL SYSTEM
- Fuse ..... AGC 30
- Battery Voltage 12-Volt
- Battery Terminal Grounded..... Negative Ground
- Alternator Regulation ..... Regulator-Rectifier
- Alternator ..... Belt driven, Motorola
- Breaker Point Gap (Gasoline) ..... .020 in. (0.508 mm)
- Spark Plugs (Gasoline)
  - Size ..... 18 mm
  - Gap ..... .030 in. (0.762 mm)

CAPACITIES (U.S. STANDARD MEASURES)
- Fuel Tank ..... 25 gal. (94.63 l)
- Engine Crankcase (Gasoline) ..... 4-1/2 qts. (4.26 l)
  - (Diesel) ..... 6 qts. (5.68 l)

DRIVE SYSTEM
- Gearbox ..... Transmits engine power to clutch packs. It drives hydraulic pump and variable drive pulley.
- Clutch Packs .... Multi-disk type, roller cam actuated with 11 wear surfaces and heavy-duty separator springs.

TRAVEL SPEEDS
- Forward or Reverse ..... 0 to 7 mph (11.3 km/hr.) (Gasoline)
  - 0 to 6 mph (9.7 km/hr.) (Diesel)
- Turning Radius .. 360 degrees in its own length

TIRES
- Type ..... Flotation, grip-type
- Size ..... 10-16.5 6-ply rated
- Type ..... Solid Rubber (Optional Diesel)
- Size 6.50-16

HYDRAULIC SYSTEM:

Pressure.....1750 psi (12.06 MPa)

Control.....Dual pedal, double hydraulic system

Pump.....Gear, 18 gpm (68.13 1/min.) at 2,400 engine rpm

Oil lines.....Welded JIC steel tubing; single-wire braid hose

Filter.....33 micron paper cartridge in suction line

HYDRAULIC CYLINDERS:

	Bore	Stroke
Boom (2)	3-inch (7.62 cm)	27.5-inch (69.85 cm)
Bucket (2)	3-inch (7.62 cm)	16.5-inch (41.91 cm)
Grapple (2)	2.5-inch (6.32 cm)	8-inch (20.32 cm)

Cylinder Rods..... Ground, heat-treated, chrome plated, polished

Boom cylinder rods..... 1.5-in. dia. (3.81 cm)

Bucket cylinder rods..... 1.25-in. dia. (3.18 cm)

Grapple cylinder rods..... 1.125-in. dia. (2.88 cm)

LOAD CAPACITY..Load capacity is 1700 lbs. (771.11 kg) Bucket capacities vary according to application

SHIPPING WEIGHT..... 4619 lbs. (2095.143 kg)

Distribution.....Rear - 73-1/2%, Front - 26-1/2%

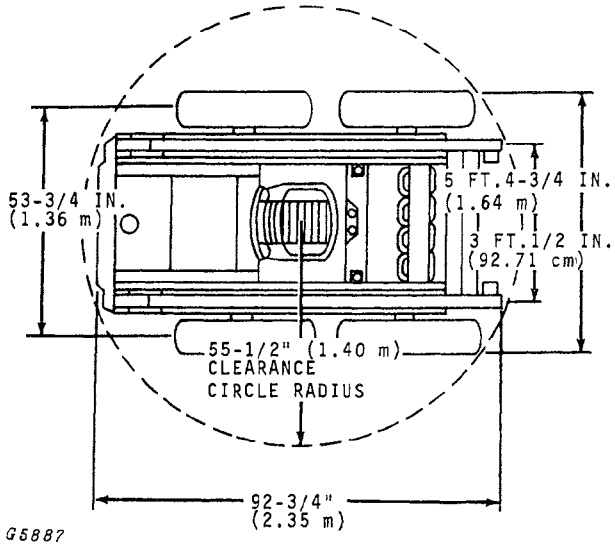

Fig. 2-Turning Radius and Dimensions

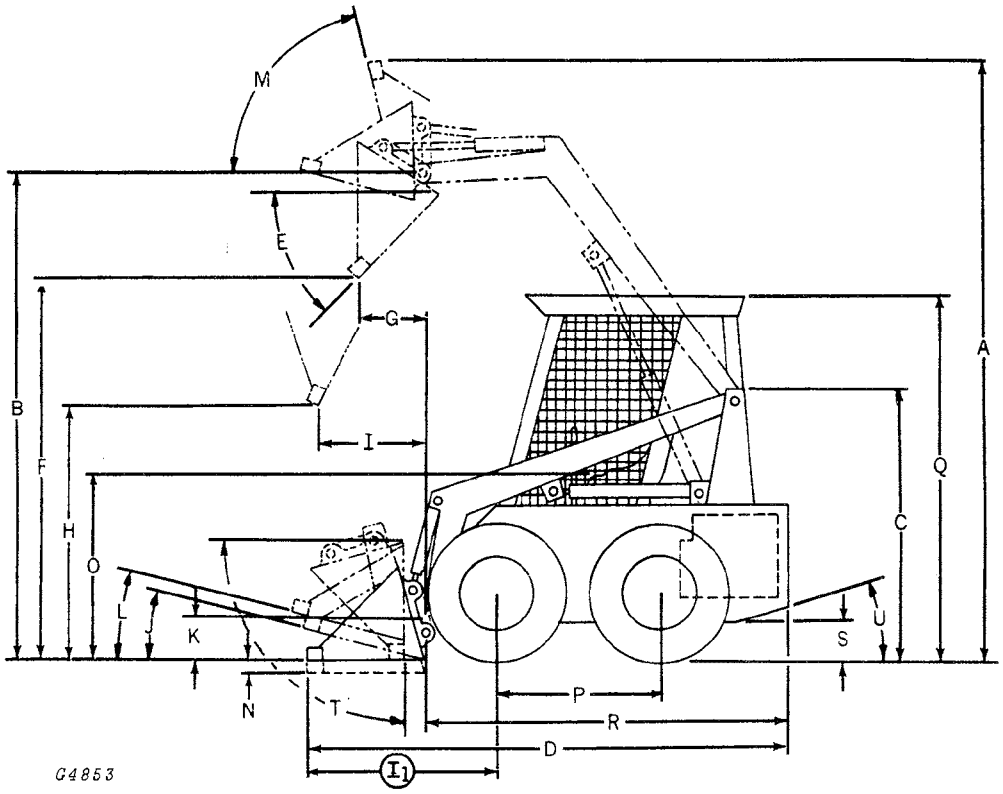

Specifications are in accordance with IEMC standards. Dimensions are with the Quik-Tatch Dirt and Foundry bucket.

A. Overall height - lift arms raised	149-1/4″ (3.79 m)
B. Height to hinge pin (Maximum)	116″ (2.94 m)
C. Overall height	61-1/2″ (1.56 m)
D. Overall length - with bucket	122-3/4″ (3.11 m)
E. Dump angle	37°
F. Dump height	91″ (2.31 m)
G. Reach of maximum height	19-1/4″ (48.9 cm)
I. Reach at "H" (25-1/4″ [64.14 cm] at 74° dump)	20″ (50.8 cm)
(28″ [71.12 cm] at 45° dump)	35-3/4″ (90.8 cm)
I_1. Reach bucket on ground	52-1/4″ (1.32 m)
J. Maximum rollback at ground	32°
K. Carry position	9-3/4″ (24.77 cm)
L. Maximum rollback at carry position	34°
M. Maximum rollback - fully raised	104°
N. Digging depth	3/4″ (1.91 cm)
O. Height to seat	42″ (1.07 m)
P. Wheel base	35″ (88.9 cm)
Q. Overall height with rollgard	85-1/4″ (2.16 m)
R. Overall length - less bucket	91″ (2.31 cm)
S. Ground clearance	7-3/4″ (19.69 cm)
T. Maximum grading angle	94°
U. Angle of departure	20°

(Specifications and design subject to change without notice)

Litho in U.S.A.

Group 10

PREDELIVERY, DELIVERY, AND AFTER-SALES SERVICES

PREDELIVERY SERVICE

Service	Specifications	Reference
Check battery for electrolyte level and specific gravity	Use battery hydrometer	See operator's manual
Check battery terminal connections	. . . . .	See operator's manual
Check variable speed drive belt for alignment	2-3/4-inch (6.98 cm)	See operator's manual
Adjust pressure of tires	45 to 50 PSI (310.26 to 344.74 kPa)	See operator's manual
Check nuts for tightness	90 ft-lbs (122.02 Nm) torque	
Check crankcase oil	Fill to top mark on oil level indicator	See operator's manual
Check gearbox oil level	1/4 pt (0.12 l) use SAE 80 gear oil.	See operator's manual
Lubricate grease fittings	John Deere Multi-Purpose Lubricant or an equivalent SAE Multipurpose-Type Grease	See operator's manual
Check hydraulic reservoir level	Fill to top mark on bayonet gauge	See operator's manual

DELIVERY SERVICE

A thorough discussion of the operation and service of a new loader at the time of delivery helps to assure complete customer satisfaction.

Complaints may arise if the owner is not shown how to operate and service his new loader correctly. Devote enough time, at your customer's convenience, to introduce him to his new loader.

The following procedure is recommended before the serviceman delivers the loader to the owner.

Using the operator's manual as a guide, be sure the owner thoroughly understands the following points:

1. Operation and use of controls.
2. Operation of the engine.
3. Operation and functions of the hydraulic system.
4. Importance of lubrication and periodic services.
5. Importance of safety.
6. Terms and conditions of warranty.

After explaining and demonstrating the above points, have the owner sign the delivery receipt and give him his operator's manual.

Litho in U.S.A.

AFTER SALES SERVICE

The purpose of this inspection is to ensure that the customer is receiving satisfactory performance from his loader.

At the same time, the inspection should reveal whether or not the loader is being operated, lubricated, and serviced properly.

The following inspection program is recommended within the first 100 hours of operation:

Service	Specifications	Reference
Check battery specific gravity and electrolyte level	Use battery hydrometer	See operator's manual
Check engine crankcase oil	Fill to top mark on oil level indicator	See operator's manual
Check level of hydraulic oil	Top mark on gauge	See operator's manual
Check air cleaner for leaks	.....	See operator's manual
Fill fuel tank and start engine	25 U.S. gal. (94.63 liters)	See operator's manual
Check operation of starter and gauges	.....	See operator's manual
Check steering operation	.....	See operator's manual
Check seat operation	.....	See operator's manual
Check variable speed drive belt alignment	2-3/4 inches (6.98 cm)	See operator's manual

Litho in U.S.A.

Group 15
LOADER TUNE-UP

Perform all the tune-up steps to put the loader in top operating condition if major disassembly and repair is not required.

Operation	Specification	Reference
Air Intake System		Operator's Manual
Check air restriction indicator for air filter.		
Backflush engine (Gasoline)		
Ignition System (Gasoline)		
Clean, test, or replace spark plugs	.030 in. gap (0.762 mm)	page 40-20-5
Check, adjust, or replace points	.020 in. gap (0.508 mm)	page 40-20-4
Check distributor and wiring		pages 40-10-3, 40-10-4 and 40-20-3
Time distributor to engine	23° at 2000 RPM	page 40-20-3
Battery		
Check electrolyte level	1.260 specific gravity at 80°F (27°C)	Operator's Manual
Clean cables, terminals, and holder		page 40-10-2
Tighten cable clamps		
Fuel System		
Check fuel tank, lines, and filter for leakage (Gasoline)		page 30-15-1
Check fuel tank, lines, and filter for leakage (Diesel)		page 30-30-1
Check sediment bowl (Gasoline)		page 30-15-1
Check sediment bowl (Diesel)		page 30-30-1
Check carburetor (Gasoline)		page 30-10-6
Tires and Wheels		
Check tire inflation	45 to 50 psi (310.26 to 344.74 kPa)	Operator's manual
Check wheel lug bolts nuts for tightness	90 ft-lbs (122.02 Nm) torque	
Electrical System		
Check for faulty ammeter gauge		. . . . .
Hydraulic System	Use only John Deere Hy-GARD Transmission and Hydraulic Oil or its equivalent in the transmission-hydraulic system. Other types of oil will not give satisfactory service, and may result in eventual damage. This special oil, available from your John Deere dealer, may be used in all weather conditions.	
Check hydraulic filter		Operator's Manual
Check hydraulic oil level		
Check control valves for leaks		
Check system for leaks		

NOTE: John Deere Hy-GARD Transmission and Hydraulic oil may be added to or mixed with John Deere Type 303 Special-Purpose Oil.

Litho in U.S.A.

Operation	Specification	Reference
Lubrication		
Replace engine oil filter	Throw-away-type filter	Operator's Manual
Lubricate loader	John Deere Multi-Purpose lubricant or an equivalent SAE Multipurpose-type grease	Operator's Manual
Drain and replace crankcase oil	5 U.S. quarts (4.73 l) (Gasoline)	Operator's Manual
	6 U.S. quarts (5.68 l) (Diesel)	Operator's Manual
Engine		
Adjust tappets (Gasoline)	Intake .008 in. (0.203 mm) Exhaust .016 in. (0.406 mm)	page 20-15-7
Adjusting tappets (Diesel)	Intake .014 in. (0.355 mm) Exhaust .018. (0.457 mm)	page 20-30-18
Drive Chains		
Check tension of all chains	1/2-inch deflection (1.27 cm)	page 50-45-1

Litho in U.S.A.

Group 20
LUBRICATION

GENERAL INFORMATION

Carefully written and illustrated lubrication instructions are included in the operator's manual. Remind the owner to follow these instructions.

The following chart shows capacities and types of lubricants of the loader components and systems. Specifications for lubricants follow the chart.

Component	Capacity	Type of Lubricant	Interval of Service
Crankcase Gasoline)	5 U.S. qts. (4.73 l)	See below	10 hours - check 100 hours - Drain oil, refill, and change filter
(Diesel)	6 U.S. qts. (5.68 l)		
Hydraulic System	20 U.S. gal. (75.7 l)	Use only John Deere Hy-GARD Transmission and Hydraulic Oil or its equivalent in the transmission-hydraulic system. Other types of oil will not give satisfactory service, and may result in eventual damage. This special oil, available from your John Deere dealer, may be used in all weather conditions. *NOTE: John Deere Hy-GARD Transmission and Hydraulic Oil may be added to or mixed with John Deere Type 303 Special-Purpose Oil.*	10 hours - check 50 hours - clean breather cap 1200 hours - change hydraulic fluid
Gearbox	1-1/4 pts. (0.59 l)	SAE 80 gear oil	50 hours - check 2500 hours - drain and refill
Grease fittings		John Deere Multi-Purpose Lubricant or an equivalent SAE multi-purpose-type grease	10 hours - loader, boom and bucket cylinders, pivot pins. 20 hours - control pedals and variable sheave
Brake		SAE J1703d or DOT-3 brake fluid	As required-fill reservoir 300 hours - refill reservoir

Litho in U.S.A.